Started on	Wednesday, 23 March 2022, 2:19 PM
State	Finished
Completed on	Wednesday, 23 March 2022, 5:00 PM
Time taken	2 hours 40 mins
Marks	9.00/12.00
Grade	**0.75** out of 1.00 (**75**%)

Question **1**

Incorrect

Mark 0.00 out of 1.00

What should be the value of R1 if the following program is executed (based on the initial register status)?

Program:

```
.ORIG x3000 ; The first instruction is at x3000
AND R1, R1, #0
AND R0, R0, #0
AND R2, R2, #0
LEA R4, #5
LEA R0, #-4
LEA R2, #8
LEA R3, #-9
LEA R1, #9
```

Initial Registers Status:

R0: x0000
R1: x0000
R2: x0000
R3: x0000
R4: x0000

Select one:

- a. x300E
- b. x3001 ✖
- c. x3011
- d. x3009
- e. x2FFE

The correct answer is:
x3011

Question **2**

Correct

Mark 1.00 out of 1.00

Where is the destination register of LDR?

Select one:

- a. IR[5:3]
- b. IR[15:12]
- c. IR[8:6]
- d. IR[2:0]
- e. IR[11:9] ✔

The correct answer is: IR[11:9]

Question **3**

Correct

Mark 1.00 out of 1.00

What should be the value of R3 if the following program is executed?

Program:

```
        .ORIG   x3000
        LEA  R1, INTE   ; R1 is the location of the integer
        AND     R2, R2, 0  ; R2 is the count of the integers
        ADD     R2, R2, 4
LOOP    ADD     R4, R2, 0
        STR     R4, R1, 0
        ADD     R1, R1, 1
        ADD     R2, R2, -1
        BRp     LOOP
        LEA  R1, INTE   ; R1 is the location of the integer
        AND     R3, R3, 0  ; R3 is the sum
        AND     R2, R2, 0  ; R2 is the count of the integers
        ADD     R2, R2, 4
LOOP1   LDR     R4, R1, 0
        ADD     R3, R3, R4
        ADD     R1, R1, 1
        ADD     R2, R2, -1
        BRp     LOOP1
EXIT    TRAP    37          ; halt
INTE    .BLKW   12
        .END
```

Select one:

- a. x0015
- b. x000A ✔
- c. x0002
- d. x000F
- e. x0006

The correct answer is: x000A

Question **4**

Correct

Mark 1.00 out of 1.00

```
        .ORIG X3000
        LD    R0, A
        LEA   R1, B
        LDR   R2, R1, #-1
        LDI   R3, C
        AND   R4, R3, #7
        STR   R4, R1, #0
        STI   R4, D
        HALT
A       .FILL X1234
        .FILL X2345
B       .BLKW 2
C       .FILL X3008
D       .FILL X300B
        .END
```

For the above program, which one of the following statements is correct?

Select one:

- a. Instruction "LEA R1, B" sets the value of R1 to the ASCII code of letter "B".
- b. Instruction "LEA R1, B" sets the value of R1 to x300A. ✔
- c. Instruction "LEA R1, B" sets the value of R1 to x3001.
- d. Instruction "LEA R1, B" sets the value of R1 to 0.
- e. Instruction "LEA R1, B" sets the value of R1 to x300B.

The correct answer is: Instruction "LEA R1, B" sets the value of R1 to x300A.

Question **5**

Correct

Mark 1.00 out of 1.00

Which one of the following statements is incorrect regarding the execution of instruction 0000110111111010? It should be assumed that the instruction is at address x3006.

The contents of the registers are as below:

register ID	register content
0	x300A
1	x3001
2	x300B
3	x3456
4	x3008
5	x3001
6	x3002
7	x3003

The contents of the memory are as below:

address	content
x300A	x1234
x300B	x2345
x300C	x3456
x300D	x4567
x300E	x5678
x300F	x6789

Select one:

- a. During the execution, condition code Z will be checked.
- b. During the execution, condition code N will be checked.
- c. During the execution, condition code P will be checked. ✔
- d. The opcode 0000 specifies this is a BR instruction.
- e. The address of the instruction that will be executed after this instruction is either x3007 or x3001.

The correct answer is: During the execution, condition code P will be checked.

Question **6**

Incorrect

Mark 0.00 out of 1.00

What is the machine code of the instruction "LDR R3, R1, 4"?

Select one:

- a. x7643
- b. x6644
- c. xE403
- d. x7444
- e. x6443 ✖

The correct answer is: x6644

Question **7**

Incorrect

Mark 0.00 out of 1.00

What is the machine code of the instruction "BRnzp LOOP" according to the following program?

Program:

```
        .ORIG   x3000
        LEA  R1, INTE  ; R1 is the location of the integer
        AND     R3, R3, 0  ; R3 is the sum
        AND     R2, R2, 0  ; R2 is the count of the integers
        ADD     R2, R2, 12
        BRnzp   LOOP
LOOP    LDR     R4, R1, 0
        ADD     R3, R3, R4
        ADD     R1, R1, 1
        ADD     R2, R2, -1
        BRp     LOOP
EXIT    TRAP    37          ; halt
INTE    .BLKW   12
        .END
```

Select one:

- a. x03FB
- b. x0FFA ✖
- c. x0E00
- d. xF025
- e. xF037

The correct answer is: x0E00

Question **8**

Correct

Mark 1.00 out of 1.00

What is the output of the program if '3' is inputted? Given that the ASCII code of 'a' is x61 and '0' is x30.

Program:

```
        .ORIG x3000
        LD R2, TERM ;
        LD R3, ASCII ; Load ASCII difference
AGAIN   TRAP x23 ; input character
        ADD R1, R2, R0 ; Test for terminate
        BRz EXIT ; Exit if done
        ADD R0, R0, R3
        TRAP x21 ; Output to monitor...
        BRnzp AGAIN
TERM    .FILL xFFc9
ASCII   .FILL x0031
EXIT    TRAP x25 ; halt
        .END
```

Select one:

- a. 0
- b. b
- c. f
- d. d ✔
- e. a

The correct answer is: d

Question **9**

Correct

Mark 1.00 out of 1.00

What should be the value of R2 if the following program is executed (based on the initial register status)?

Program:

```
.ORIG x3000 ; The first instruction is at x3000
AND R0, R0, #0
ADD R2, R0, #2
ADD R3, R0, #3
LEA R1, #9
STR R3, R1, #3
STR R2, R1, #4
LDR R2, R1, #3
LDR R3, R1, #4
```

Initial Registers Status:

R0: x0000
R1: x0000
R2: x0000
R3: x0000
R4: x0000

Select one:

- a. x300D
- b. x300E
- c. x300F
- d. x0002
- e. x0003 ✔

The correct answer is:
x0003

Question **10**

Correct

Mark 1.00 out of 1.00

According to below LC3 data-path, which component is used to control the selection of source values for MAR (Memory Address Register)?

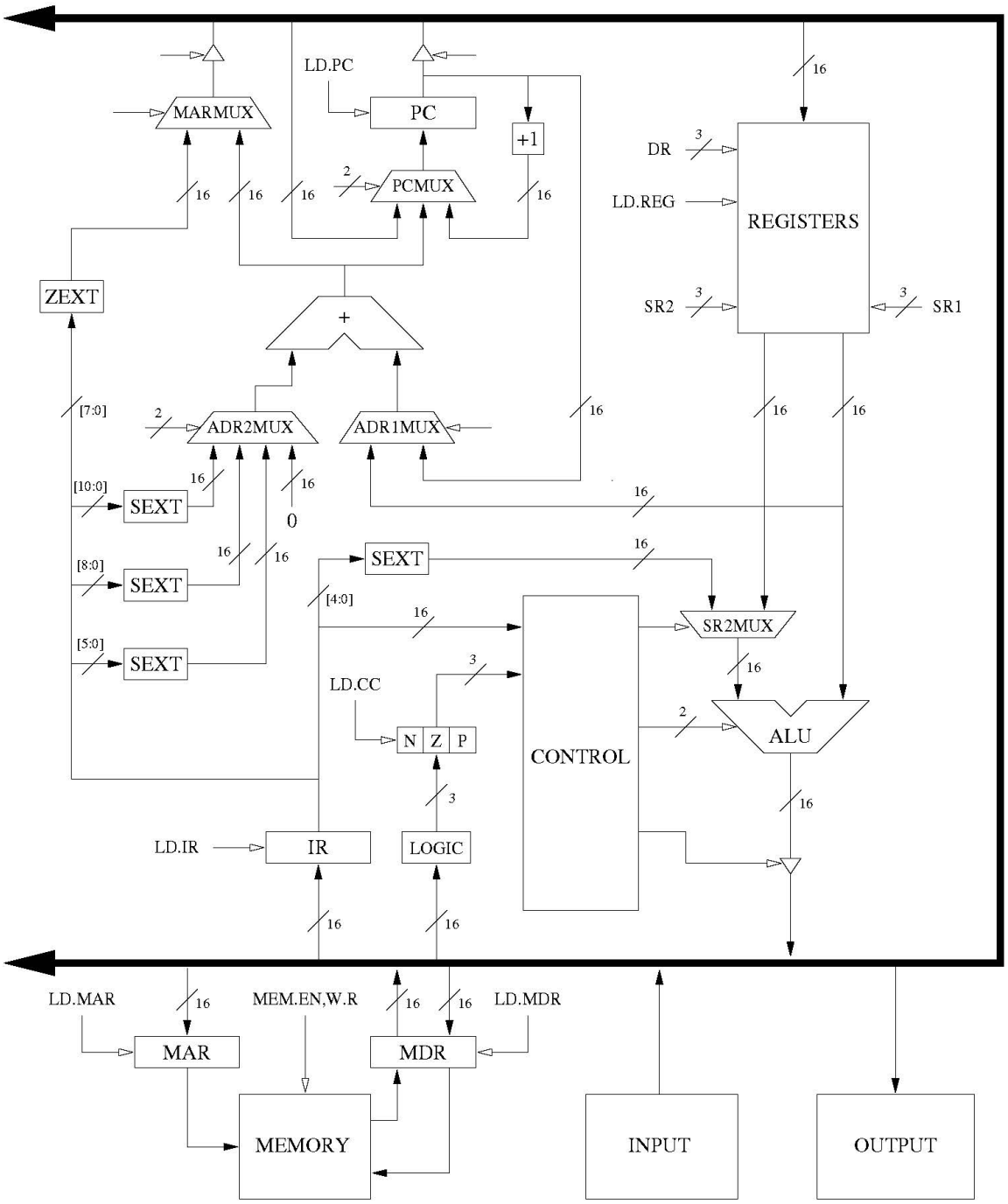

Select one:

- a. Finite State Machine (Control)
- b. ALU
- c. PCMUX
- d. MARMUX ✔
- e. Register File (Registers)

The correct answer is: MARMUX

Question **11**

Correct

Mark 1.00 out of 1.00

What is the output of the program if ‘C’ is inputted? Given that the ASCII code of 'a' is x61 and 'A' is x41.

Program:

```
        .ORIG x3000
        LD R2, TERM
        LD R3, ASCII ; Load ASCII difference
AGAIN   TRAP x23 ; input character
        ADD R1, R2, R0 ; Test for terminate
        BRz EXIT ; Exit if done
        ADD R0, R0, R3
        TRAP x21 ; Output to monitor...
        BRnzp AGAIN
TERM    .FILL xFFc9
ASCII   .FILL x0020
EXIT    TRAP x25 ; halt
        .END
```

Select one:

- a. z
- b. c ✔
- c. b
- d. a
- e. 0

The correct answer is: c

Question **12**

Correct

Mark 1.00 out of 1.00

What is the condition code after the execution of "ADD R4, R1, R3" based on the following program?

Program:

```
        .ORIG x3000
        LD R3, V3       ; Load V3 to R3
        LD R2, V2       ; Load V2 to R2
        LD R1, V1       ; Load V1 to R1
        LD R0, V0       ; Load V0 to R0
        ADD R4, R1, R3
        NOT R4, R2
        AND R4, R2, R1
        LDR R4, R0, 5
EXIT    TRAP x25        ; halt
V0      .FILL x3000     ; M[V0] = x3000
V1      .FILL x0001     ; M[V1] = 1
V2      .FILL xFFFE     ; M[V2] = -2
V3      .FILL xFFFF     ; M[V3] = -1
        .END
```

Select one:

- a. N
- b. P
- c. Z ✔
- d. NPZ
- e. NP

The correct answer is: Z

◄ Practice MCQ 3 (for practice only)

Jump to...

Practice MCQ 4 (for practice only) ►